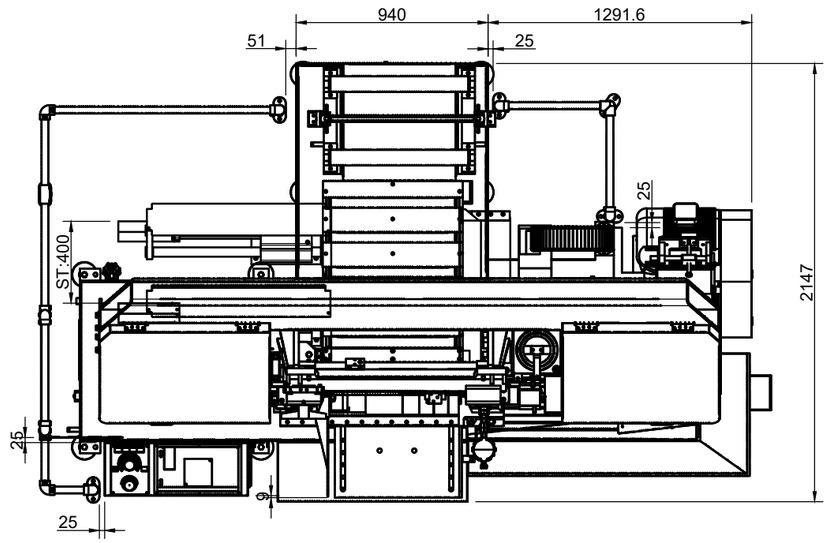

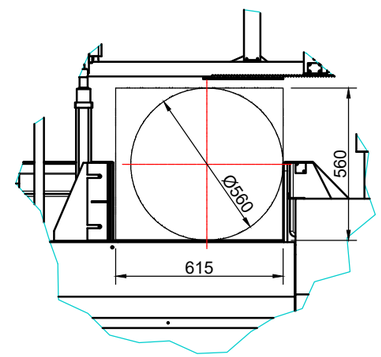

FIGURE A (1 : 15)

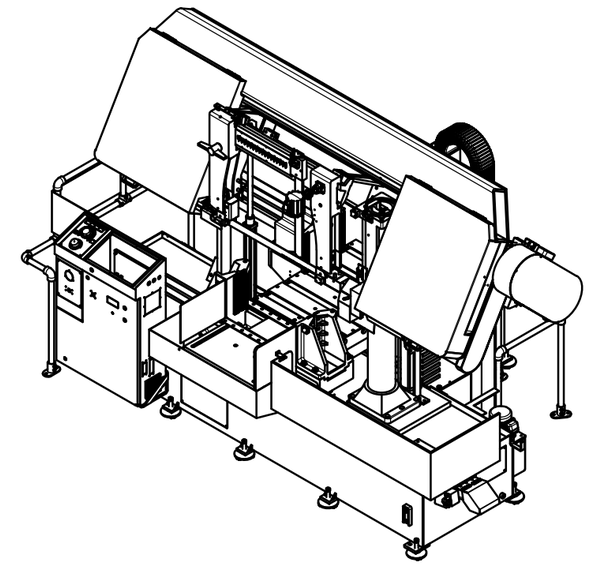

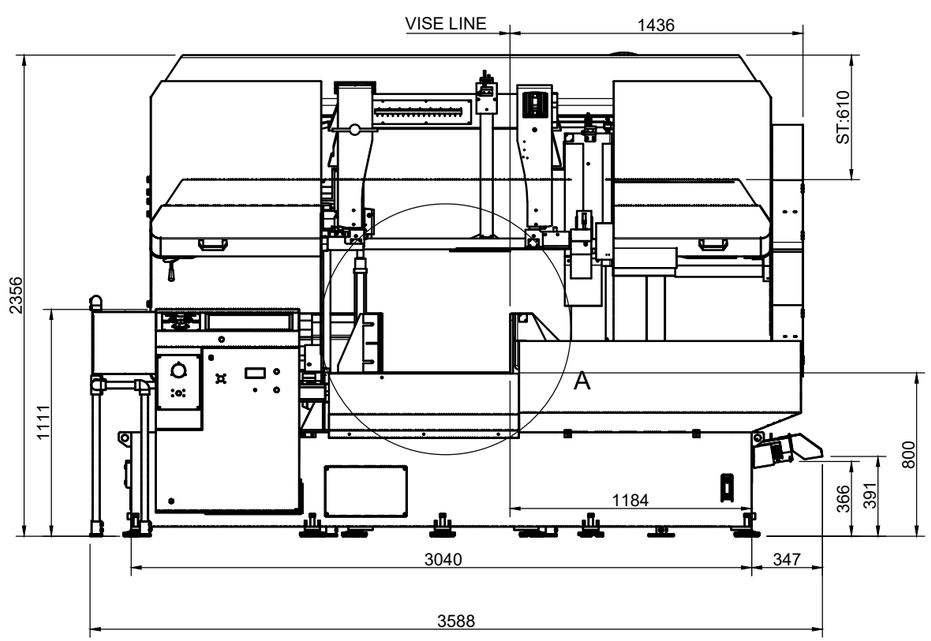

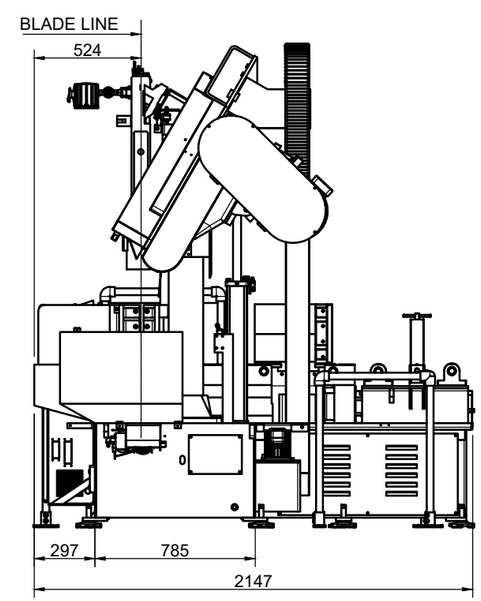

PLOTTED: 5/19/25

REV	DATE	REMARKS	BY
L			
K			
J			
I			
H			
G			
F			
E			
D			
C			
B			
A			

DO NOT SCALE DRAWINGS
BREAK ALL SHARP CORNERS
TOLERANCES BETWEEN MACHINED SURFACES:
UNLESS OTHERWISE SPECIFIED:
.X ± .1 .XX ± .02 .XXX ± .008

TITLE
FLOOR PLAN
HFA560P (PA22MPC)

BLANK SIZE

MATERIAL

DATE	SCALE	DRWN BY	CHECKED BY
5/19/25	1:20	DDS	

ALL RIGHTS TO ENGINEERING, DESIGN, INVENTIONS AND PATENTS RESERVED TO AND PROPERTY OF:

AMADA MARVEL, INC
OSHKOSH, WI., U.S.A.

CAD NO.

PART NO.
30190002000