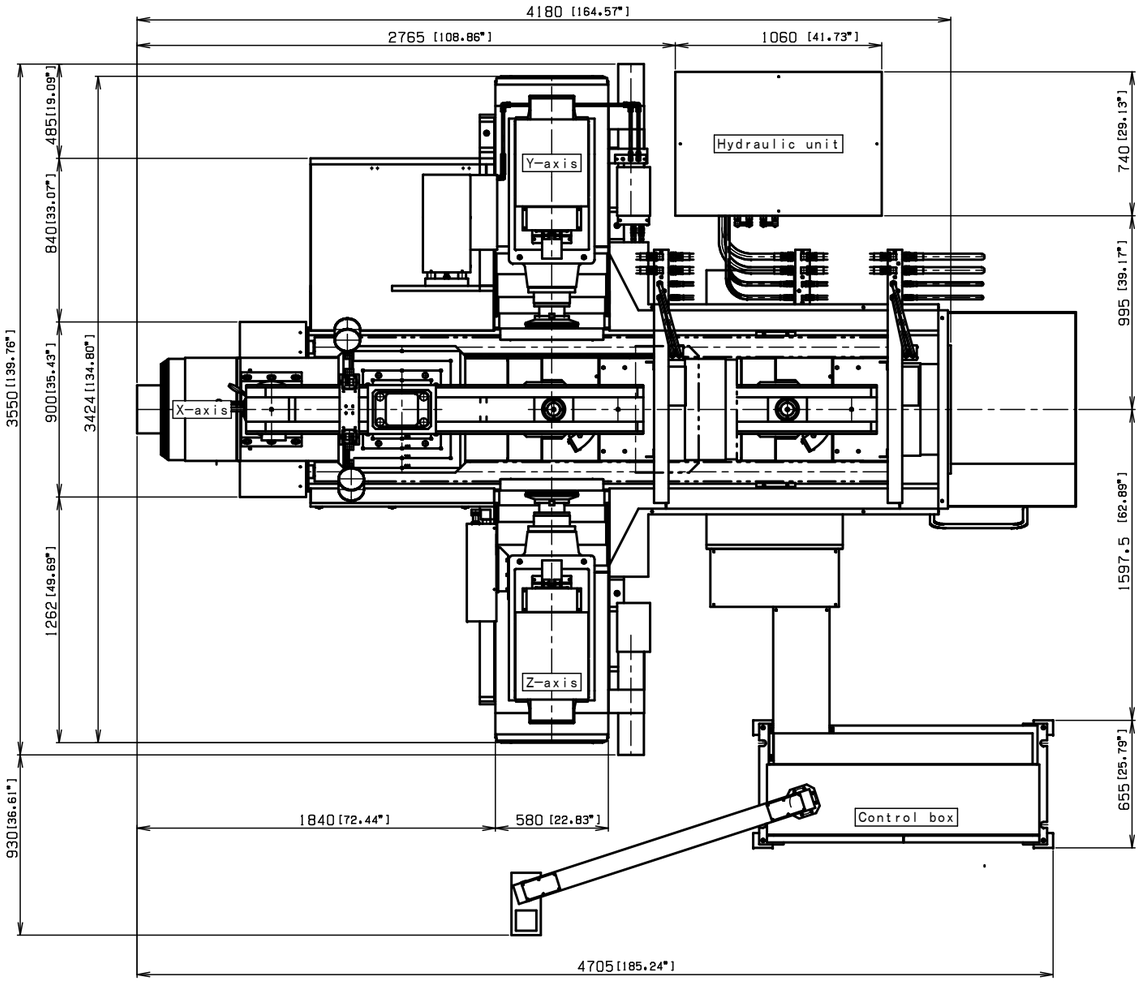
4180 [164.57"]
2765 [108.86"]
1060 [41.73"]
Hydraulic unit
Y-axis
X-axis
Z-axis
Control box
485 [19.09"]
840 [33.07"]
900 [35.43"]
1262 [49.69"]
3550 [139.76"]
3424 [134.80"]
930 [36.61"]
740 [29.13"]
995 [39.17"]
1597.5 [62.89"]
655 [25.79"]
1840 [72.44"]
580 [22.83"]
4705 [185.24"]

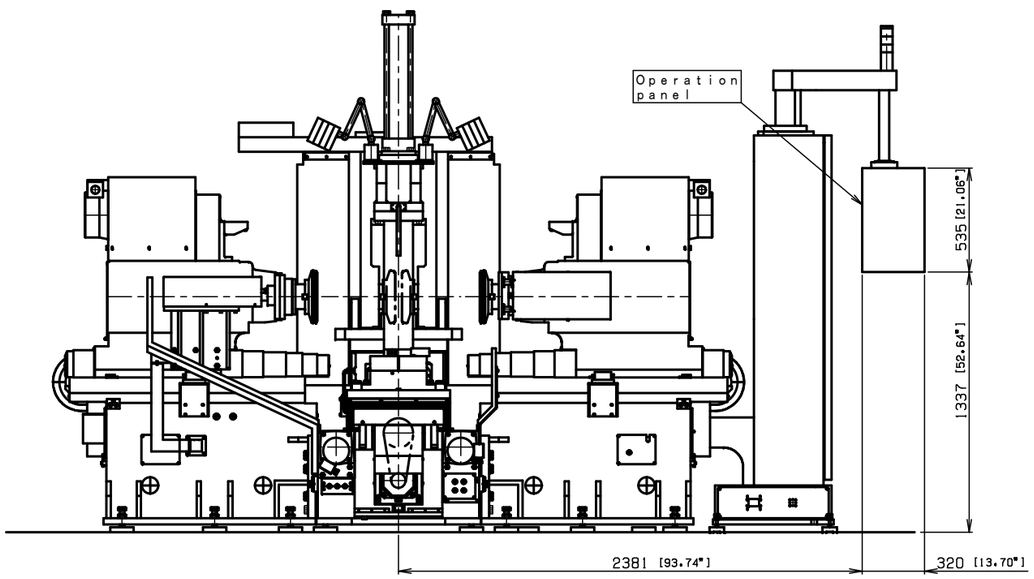
Operation panel
535 [21.06"]
1337 [52.64"]
2381 [93.74"]
320 [13.70"]

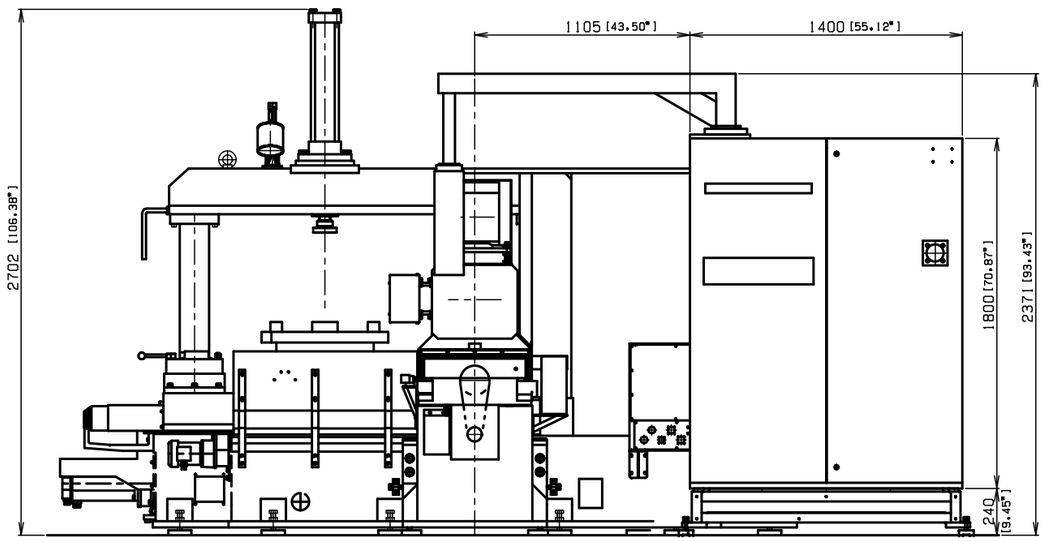
1105 [43.50"]
1400 [55.12"]
2702 [106.38"]
1800 [70.87"]
2371 [93.43"]
240 [9.45"]

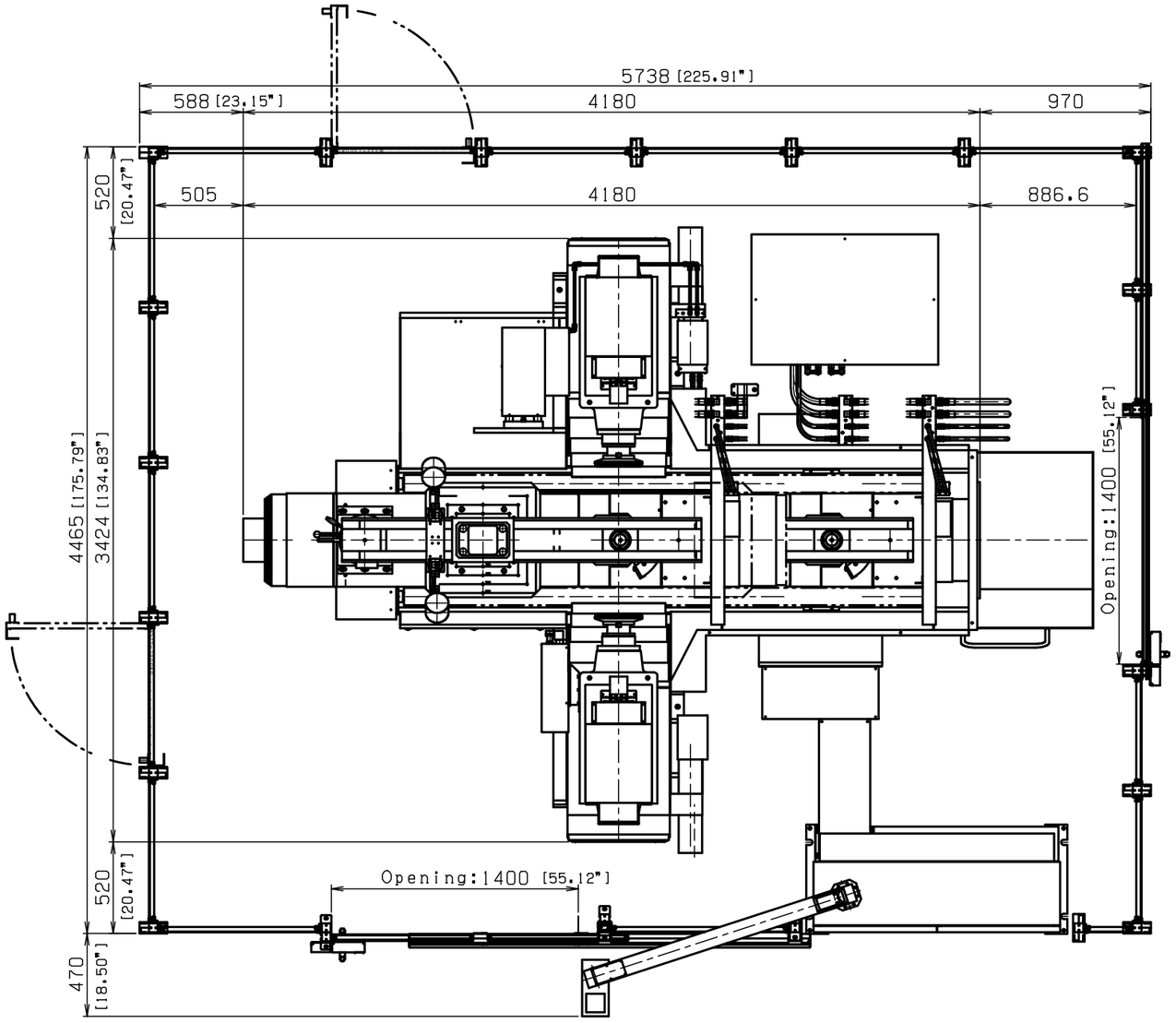
5738 [225.91"]
588 [23.15"]
4180
970
505
4180
886.6
520
[20.47"]
4465 [175.79"]
3424 [134.83"]
Opening:1400 [55.12"]
520
[20.47"]
470
[18.50"]
Opening:1400 [55.12"]

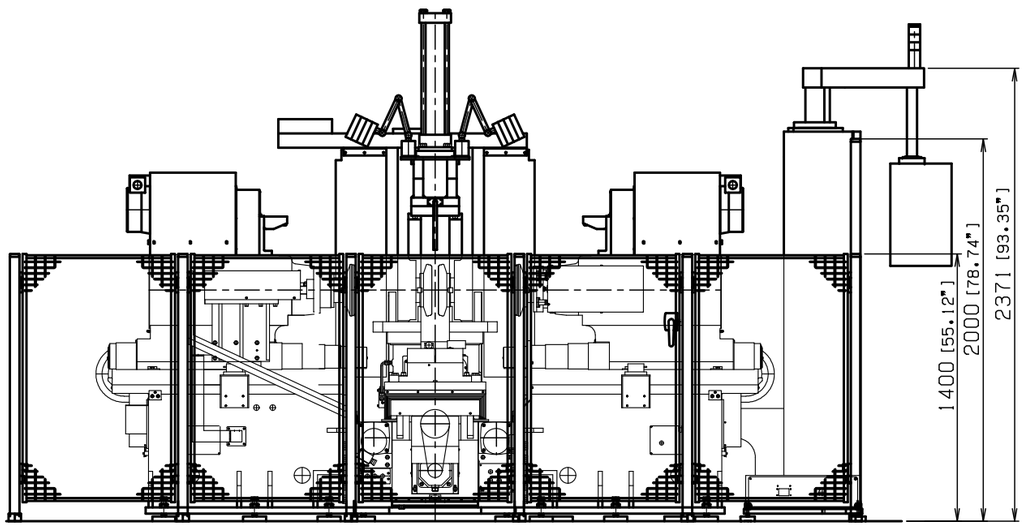
1400 [55.12"]
2000 [78.74"]
2371 [93.35"]

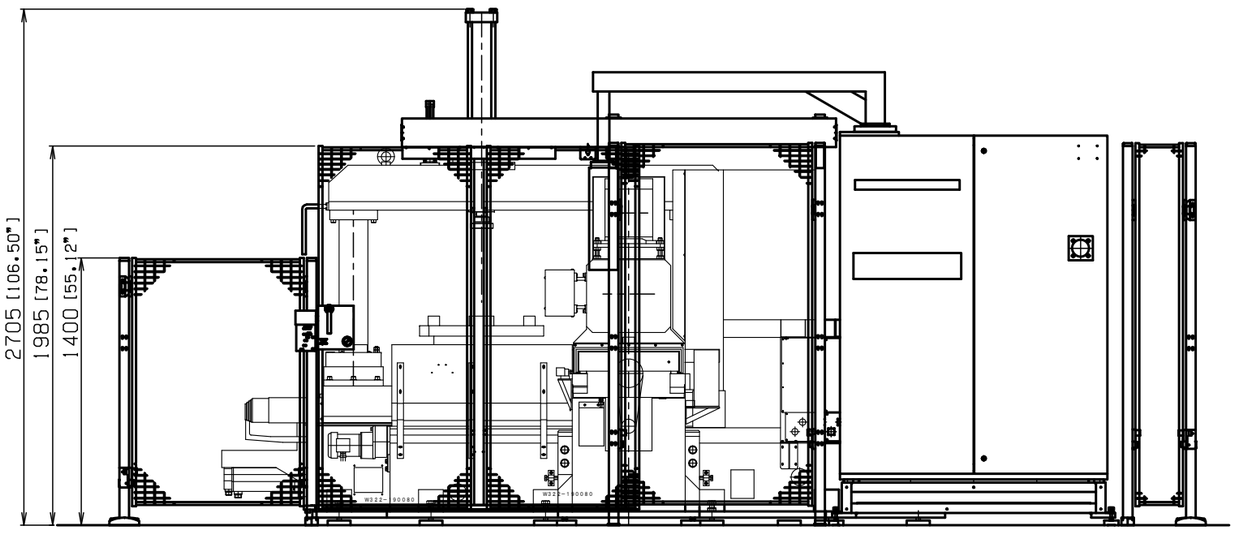
2705 [106.50"]
1985 [78.15"]
1400 [55.12"]